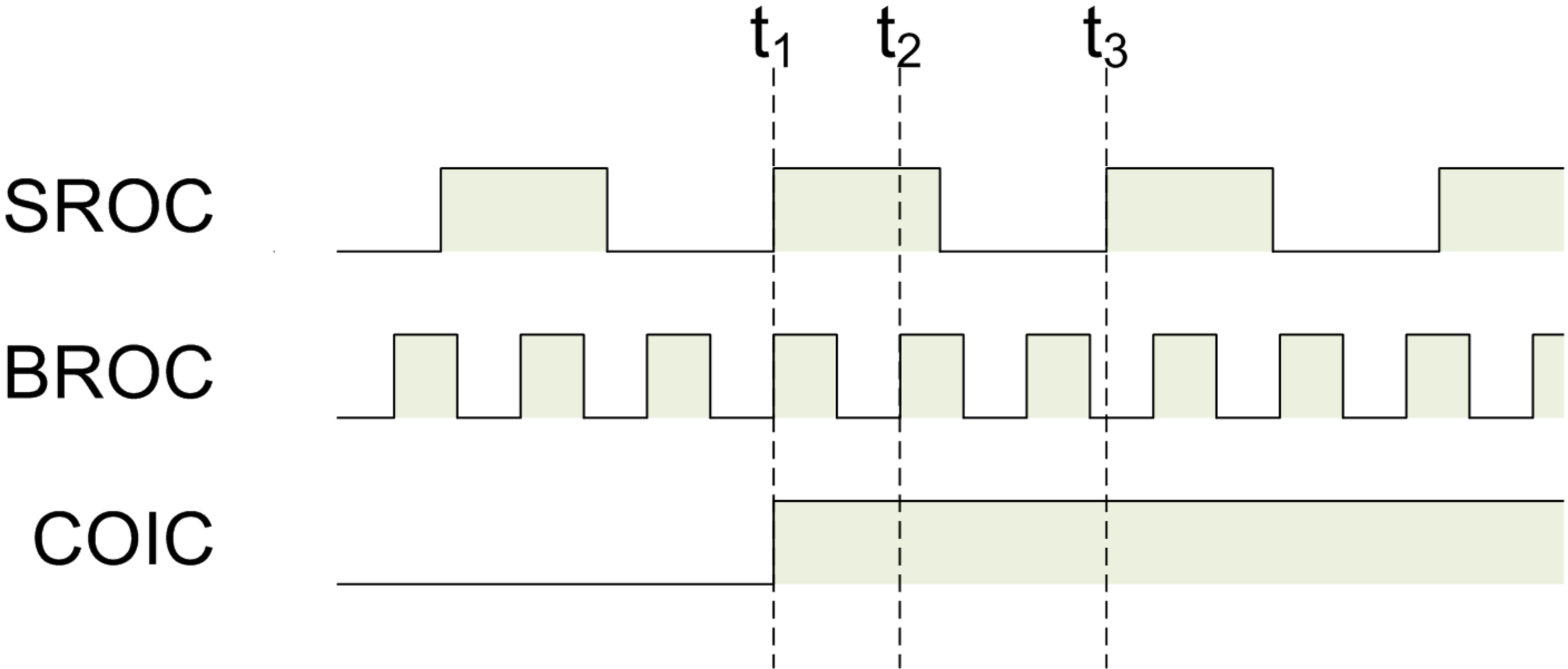
t1
t2
t3
SROC
BROC
COIC